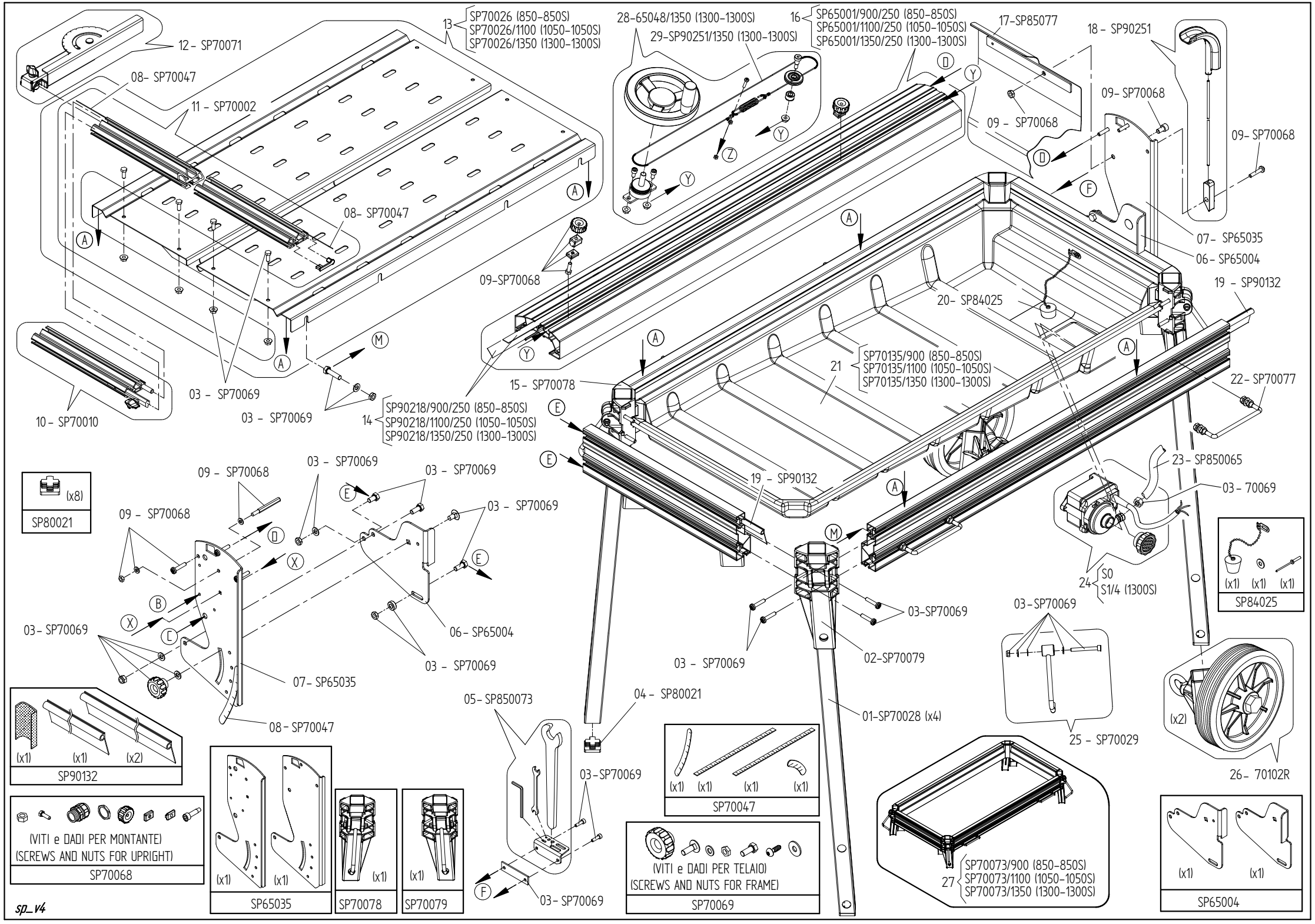
12 - SP70071
08- SP70047
11 - SP70002
13 SP70026 (850-850S)
SP70026/1100 (1050-1050S)
SP70026/1350 (1300-1300S)
28-65048/1350 (1300-1300S)
29-SP90251/1350 (1300-1300S)
16 SP65001/900/250 (850-850S)
SP65001/1100/250 (1050-1050S)
SP65001/1350/250 (1300-1300S)
17-SP85077
18 - SP90251
09- SP70068
09 - SP70068
09- SP70068
08- SP70047
09-SP70068
07- SP65035
06- SP65004
19 - SP90132
20- SP84025
21 SP70135/900 (850-850S)
SP70135/1100 (1050-1050S)
SP70135/1350 (1300-1300S)
22- SP70077
15- SP70078
03 - SP70069
03 - SP70069
14 SP90218/900/250 (850-850S)
SP90218/1100/250 (1050-1050S)
SP90218/1350/250 (1300-1300S)
10- SP70010
(x8)
SP80021
09 - SP70068
03 - SP70069
03 - SP70069
09 - SP70068
03 - SP70069
19 - SP90132
23- SP850065
03 - 70069
24 S0
S1/4 (1300S)
(x1) (x1) (x1)
SP84025
03- SP70069
06- SP65004
03 - SP70069
07- SP65035
03 - SP70069
02-SP70079
03-SP70069
03-SP70069
25 - SP70029
(x2)
26- 70102R
08 - SP70047
(x1) (x1) (x2)
SP90132
05- SP850073
04 - SP80021
01-SP70028 (x4)
03-SP70069
(x1) (x1) (x1) (x1)
SP70047
(VITI e DADI PER MONTANTE)
(SCREWS AND NUTS FOR UPRIGHT)
SP70068
(x1) (x1)
SP65035
(x1)
SP70078
(x1)
SP70079
03- SP70069
(VITI e DADI PER TELAIO)
(SCREWS AND NUTS FOR FRAME)
SP70069
27 SP70073/900 (850-850S)
SP70073/1100 (1050-1050S)
SP70073/1350 (1300-1300S)
(x1) (x1)
SP65004
sp_v4